TLPBF
TIMELAPSE PRODUCTION BLACK FOREST

Frame PTH

Motorized pan / tilt head

Description

Version: 1.1
Author: Hans Vollmer
Date: January 31, 2022

Owner: Hans Vollmer
Epfentalstrasse 14
78052 Villingen-Schwenningen
Germany

Tel: +49 7721 908702
E-mail: info@tlpbf.de
Web: https://www.tlpbf.de

UST-ID: DE334059283
Volksbank EG The designer bank
IBAN: DE32 6649 0000 0082 6400 02
BIC: GENODE61OG1

Features:

- Powerful stepper motor
- Worm gear with a ratio of 40:1
- Integrated Arca Swiss Profile
- Arca Swiss clamp for quick mounting of the camera
- Light weight (600g)
- Compact dimensions (110x75x85mm) L/W/H
- 2 Integrated water carts for precise alignment

The **Frame PTH** is the ideal complement to the 3-axis motor controller **Frame MoCo** for controlling the horizontal and vertical movement of a camera.

The **Frame PTH** is a motorized rotating head for cameras, which can be used for panorama shots (Pan) in horizontal orientation, or for tilting the camera in vertical orientation (Tilt). A combination of 2 **Frame PTH** allows a 2 axis movement of the camera, e.g. for gigapixel shots.
In combination with a slider, 2 or 3 axis motion timelapse recordings are possible.

The integrated Arca-Swiss compatible clamp allows a camera to be mounted quickly and securely with a corresponding sill swap plate.

Owner: Hans Vollmer
Epfentalstrasse 14
78052 Villingen-Schwenningen
Germany

Tel: +49 7721 908702
E-mail: info@tlpbf.de
Web: https://www.tlpbf.de

UST-ID: DE334059283
Volksbank EG The designer bank
IBAN: DE32 6649 0000 0082 6400 02
BIC: GENODE61OG1

Simple assembly

The 2 integrated Arca-Swiss profiles allow easy mounting on any Arca-Swiss compatible clamp, mounted on a ball head or on a rail.

Camera mounting

To mount the camera on the **frame PTH**, an L-bracket must be attached to it, e.g. MENGS MPU-100 or corresponding for the camera used.

Mounting for panorama shots

To shoot a panorama, mount the **Frame PTH on the** clamp of the ball head mounted on a tripod, and then attach the camera to the clamp of the **Frame PTH.**

Owner: Hans Vollmer
Epfentalstrasse 14
78052 Villingen-Schwenningen
Germany

Tel: +49 7721 908702
E-mail: info@tlpbf.de
Web: https://www.tlpbf.de

UST-ID: DE334059283
Volksbank EG The designer bank
IBAN: DE32 6649 0000 0082 6400 02
BIC: GENODE61OG1

Mounting for gigapixel shots

For gigapixel shots, 2 **Frame PTH** are required To mount the 2nd Frame PTH, first mount an Arca-Swiss compatible rail on the 1st Frame **PTH,** such as the MENGS FNR-200 which has a clamp at one end to accept the 2nd **Frame PTH. The** angle for the tilt movement is somewhat limited with this mounting.

Mounting for gigapixel or 360° shots with extended tilt angle

To get more room to move for the tilt movement, an L-rail (e.g. MENGS BPL-01AL) can be mounted on the frame PTH for pan the movement. The tilt PTH is then attached to the vertical part of the rail and finally the camera is attached to it. With this mounting, even a camera with a large lens can be easily aligned to the **nodal point.**

Owner: Hans Vollmer
Epfentalstrasse 14
78052 Villingen-Schwenningen
Germany

Tel: +49 7721 908702
E-mail: info@tlpbf.de
Web: https://www.tlpbf.de

UST-ID: DE334059283
Volksbank EG The designer bank
IBAN: DE32 6649 0000 0082 6400 02
BIC: GENODE61OG1

2 and 3 axes timelapse in combination with a slider

Mounting 2 axes shots with a slider

When the **frame PTH** is mounted on the ball head on a slider, 2 axis motion timelapse shots can be taken.
Horizontal movement through the slider, combined with the rotational movement of the **frame PTH**.

Mounting 3 axes shots with a slider

For 3 axis recordings in connection with a slider, 2 **frame PTH** are mounted on the ball head of a slider analogously to the mounting for recording gigpixels.

Owner: Hans Vollmer
Epfentalstrasse 14
78052 Villingen-Schwenningen
Germany

Tel: +49 7721 908702
E-mail: info@tlpbf.de
Web: https://www.tlpbf.de

UST-ID: DE334059283
Volksbank EG The designer bank
IBAN: DE32 6649 0000 0082 6400 02
BIC: GENODE61OG1

Structure

Housing from the 3D printer

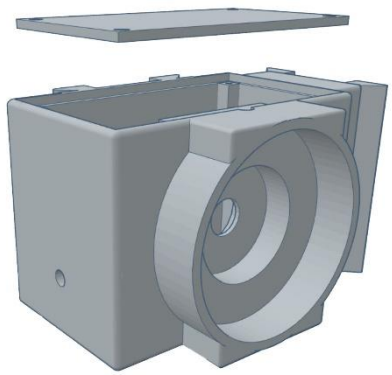

The housing of the **Frame PTH** originates from a 3D printer. This allows a simple, but and precise manufacturing.
High stability is achieved through special printing techniques.

Precise mechanics

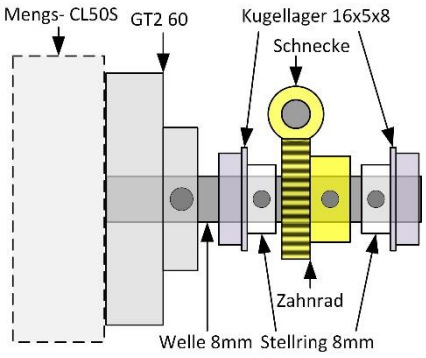

The mechanical heart of the **Frame PTH** is a precisely manufactured axle made of steel, on which the gear wheel, the mounting platform for the camera and other parts are mounted. This is the only way to ensure that the backlash between the gear wheel and worm is minimized and that the mechanics can withstand even greater loads.

Owner: Hans Vollmer
Epfentalstrasse 14
78052 Villingen-Schwenningen
Germany

Tel: +49 7721 908702
E-mail: info@tlpbf.de
Web: https://www.tlpbf.de

UST-ID: DE334059283
Volksbank EG The designer bank
IBAN: DE32 6649 0000 0082 6400 02
BIC: GENODE61OG1

Service (if a screw is loose)

Especially when the frame PTH is used as a tilt unit with a heavy camera, larger forces can act on the axis of the PTH. This can lead to loosening of some screws. Due to the design of the Frame PTH, all screws are easily accessible and adjustable. These loose screws are noticeable by a play of the mounting platform for the camera or by a lifting and lowering of the camera when changing direction.

For a service, the Frame PTH must be connected to the Frame MoCo and the Jog Mode must be selected in the Frame App, thereby bringing the mechanics into the correct position so that the respective screws are accessible.

To access the mechanics, remove the 4 screws on the PTH as shown.

The camera raises or lowers when changing direction

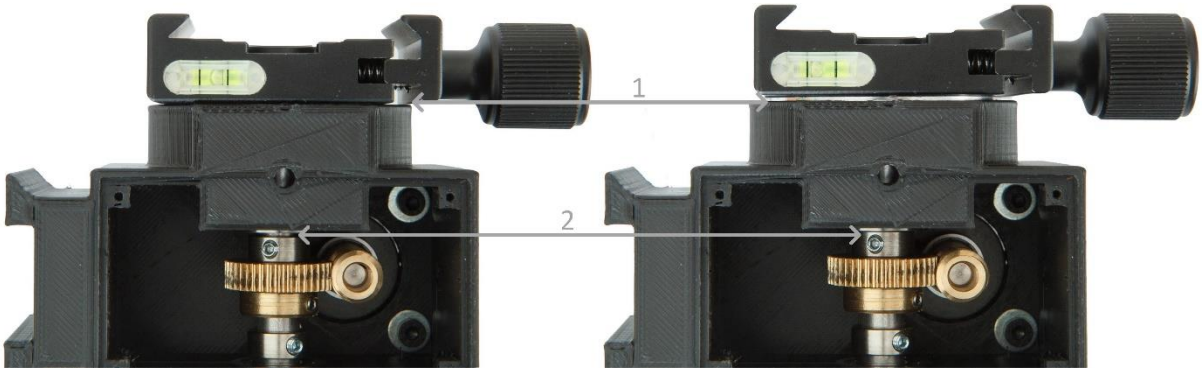

If the camera lifts (1) or lowers slightly when changing direction, a screw on a set collar is loose and a gap between a set collar and the ball bearing is visible (2 left).

Owner: Hans Vollmer
Epfentalstrasse 14
78052 Villingen-Schwenningen
Germany

Tel: +49 7721 908702
E-mail: info@tlpbf.de
Web: https://www.tlpbf.de

UST-ID: DE334059283
Volksbank EG The designer bank
IBAN: DE32 6649 0000 0082 6400 02
BIC: GENODE61OG1

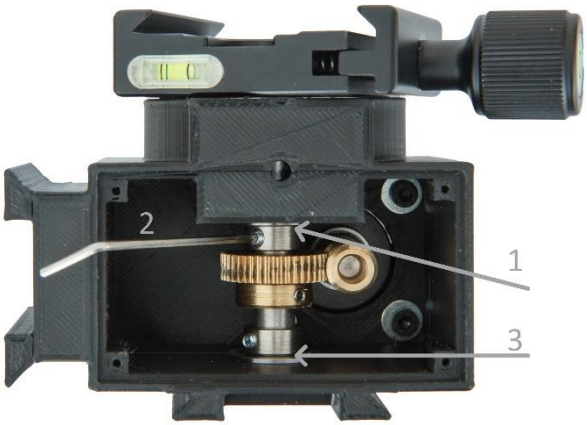

To remedy this, first loosen the screw on the setting ring with the 2mm Allen key (2). Then position the mechanism by moving it in jog mode so that the gear wheel is in the center of the worm.
Push the adjusting ring in the direction of the ball bearing (1) or (3) and retighten the screw on the adjusting ring.

Check whether the problem has been eliminated by changing the direction several times.

A change of direction is only executed with a delay

If the camera only moves in the new direction with a delay when changing direction, this is an indication of a loose screw on the worm. Due to the looseness, the worm first moves up or down on the motor shaft during a change of direction before the gear wheel moves.

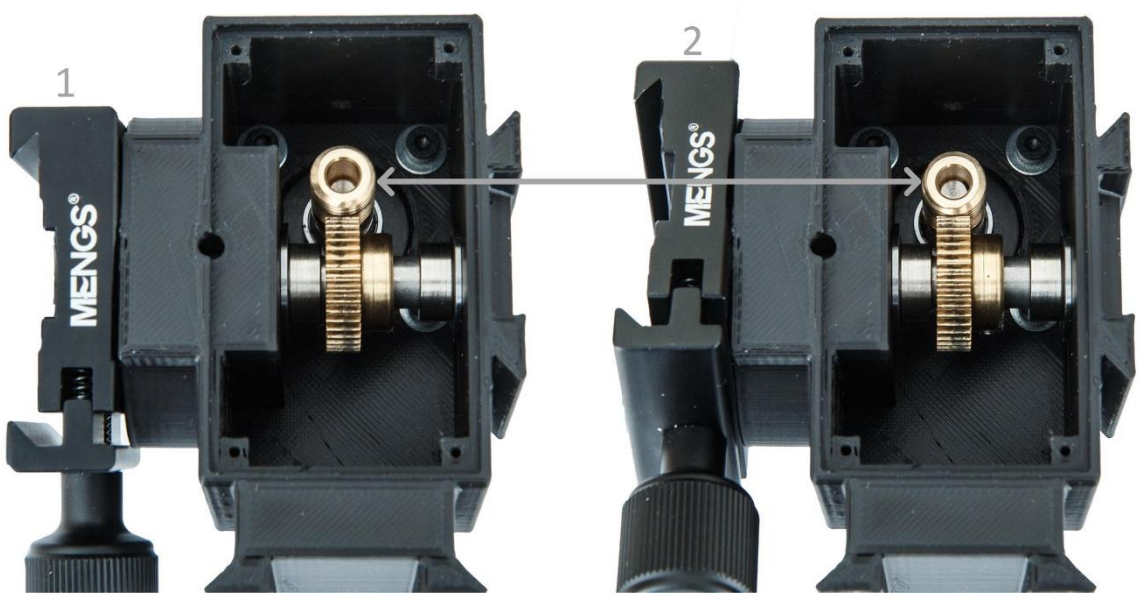

Owner: Hans Vollmer
Epfentalstrasse 14
78052 Villingen-Schwenningen
Germany

Tel: +49 7721 908702
E-mail: info@tlpbf.de
Web: https://www.tlpbf.de

UST-ID: DE334059283
Volksbank EG The designer bank
IBAN: DE32 6649 0000 0082 6400 02
BIC: GENODE61OG1

An opening is provided on the housing of the frame PTH to make the screw screw accessible from the outside. The screw can be seen through this opening. To bring the screw of the auger into the position of the opening, the motor is turned slowly in jog mode and observed through the opening until the screw is visible.

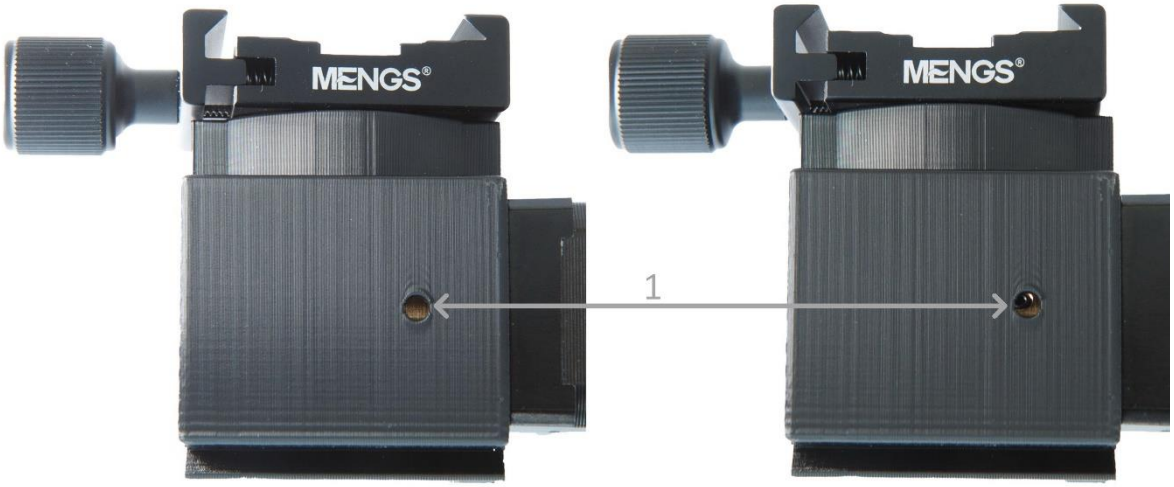

For exact positioning, the slider can be rotated very slowly in jog mode with the + and - keys.

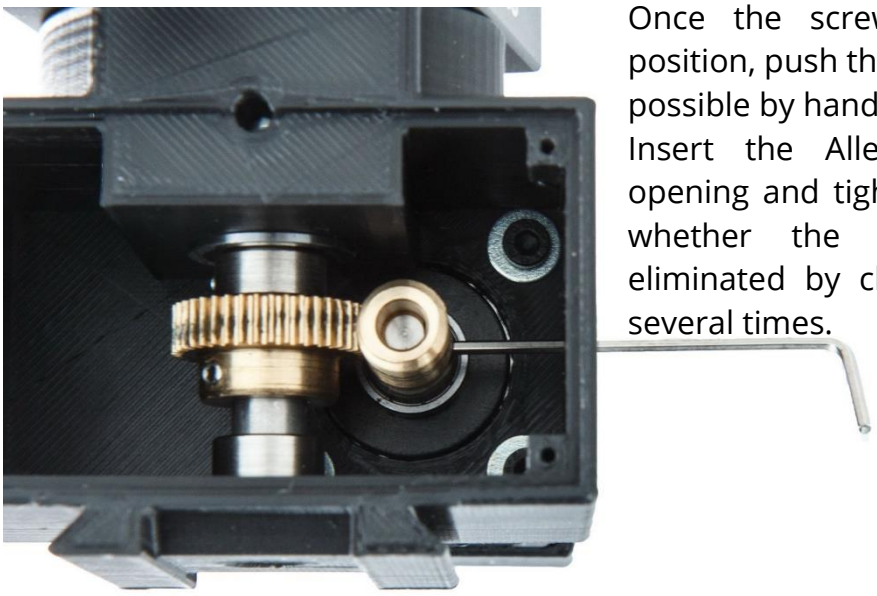

Once the screw is in the correct position, push the screw down as far as possible by hand.
Insert the Allen key through the opening and tighten the screw. Check whether the problem has been eliminated by changing the direction several times.

The clamp can be turned a little by hand

If the clamp can be easily moved back and forth by hand without the gear moving, this is an indication of a loose screw on the gear.

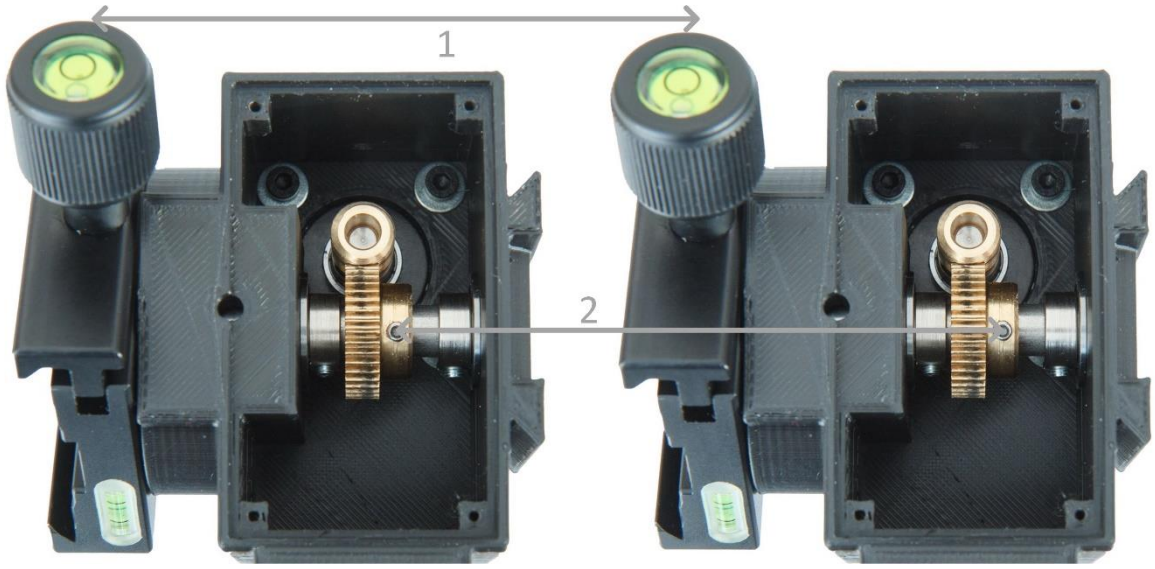

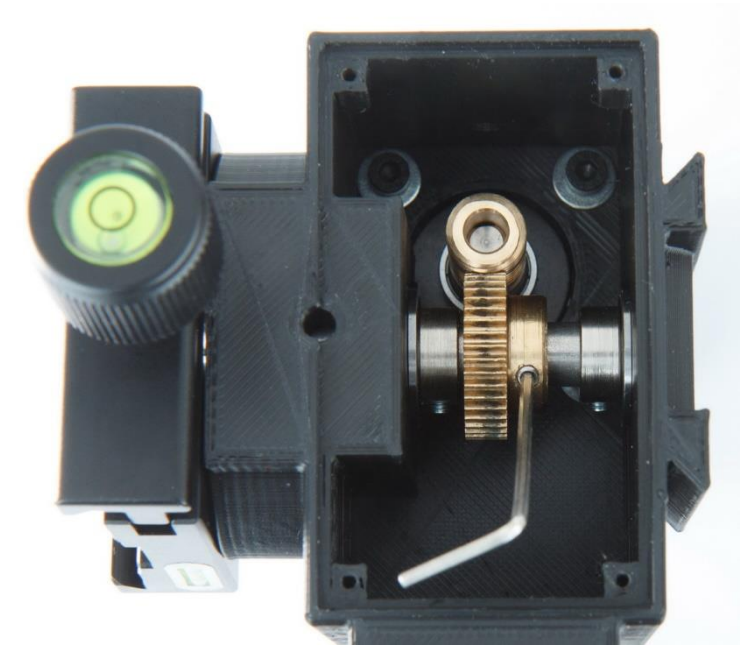

To fix this, move the gear in jog mode to a position where the gear screw is accessible.
Then tighten the screw with the 2mm Allen key.
Check if the problem has been eliminated by moving the clamp.

Owner: Hans Vollmer
Epfentalstrasse 14
78052 Villingen-Schwenningen
Germany

Tel: +49 7721 908702
E-mail: info@tlpbf.de
Web: https://www.tlpbf.de

UST-ID: DE334059283
Volksbank EG The designer bank
IBAN: DE32 6649 0000 0082 6400 02
BIC: GENODE61OG1

Frame PTH electrical connection

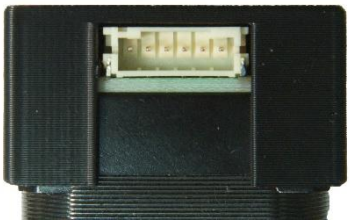

For connection to the Frame MoCo or other controllers, the Frame PTH is equipped with a JST PH2-6 header.

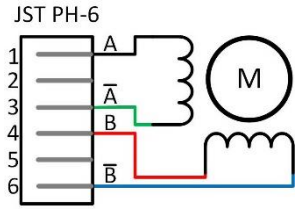

The assignment of the 6 pin header is as shown.

Specification:

Motor	Bipolar stepper motor NEMA14
Gearbox	Worm gear 40:1
Connection	JST PH2 6 pole
Load max.	3 kg
Rated current	1,5A
Operating temperature	-10 -50°
Dimensions	110x75x85mm (LxWxH)
Weight	approx. 600g

Safety instructions:

The operation of the Frame PTH is at your own risk. The user is liable for damage to property and personal injury resulting from the operation of the Frame PTH.

The symbol of a crossed-out wheeled garbage can indicates that our device complies with Directive 2012/19/EU of the European Parliament and of the Council of 27/01/2003 concerning separate collection of electrical and electronic equipment.

By affixing the CE mark, we declare that our device, in accordance with EU Regulation 765/2008, complies with the applicable requirements set out in the Community harmonization legislation on its affixing.

Owner: Hans Vollmer
Epfentalstrasse 14
78052 Villingen-Schwenningen
Germany

Tel: +49 7721 908702
E-mail: info@tlpbf.de
Web: https://www.tlpbf.de

UST-ID: DE334059283
Volksbank EG The designer bank
IBAN: DE32 6649 0000 0082 6400 02
BIC: GENODE61OG1